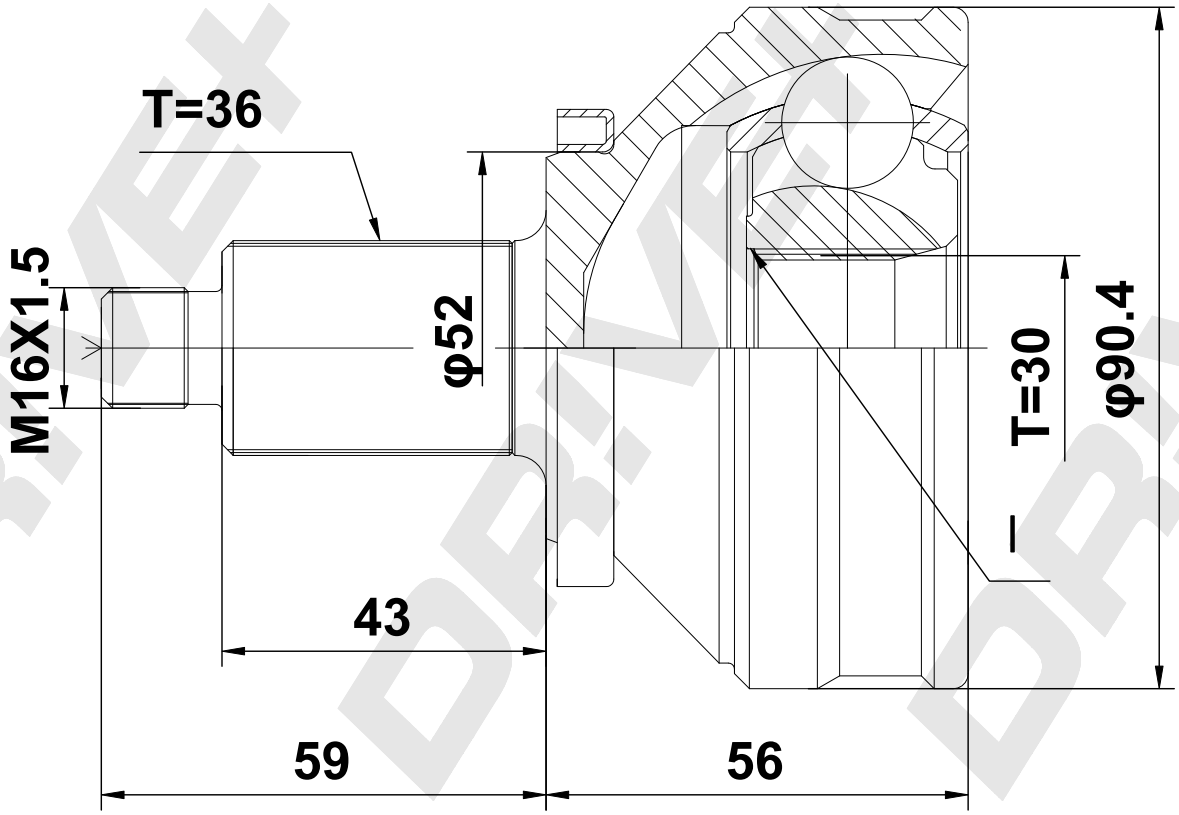

DP Number	Part Number	Drawing Version Number	Drawing Issue Date
DP2110.10.1117	DDC1117	V1	2025.09.04